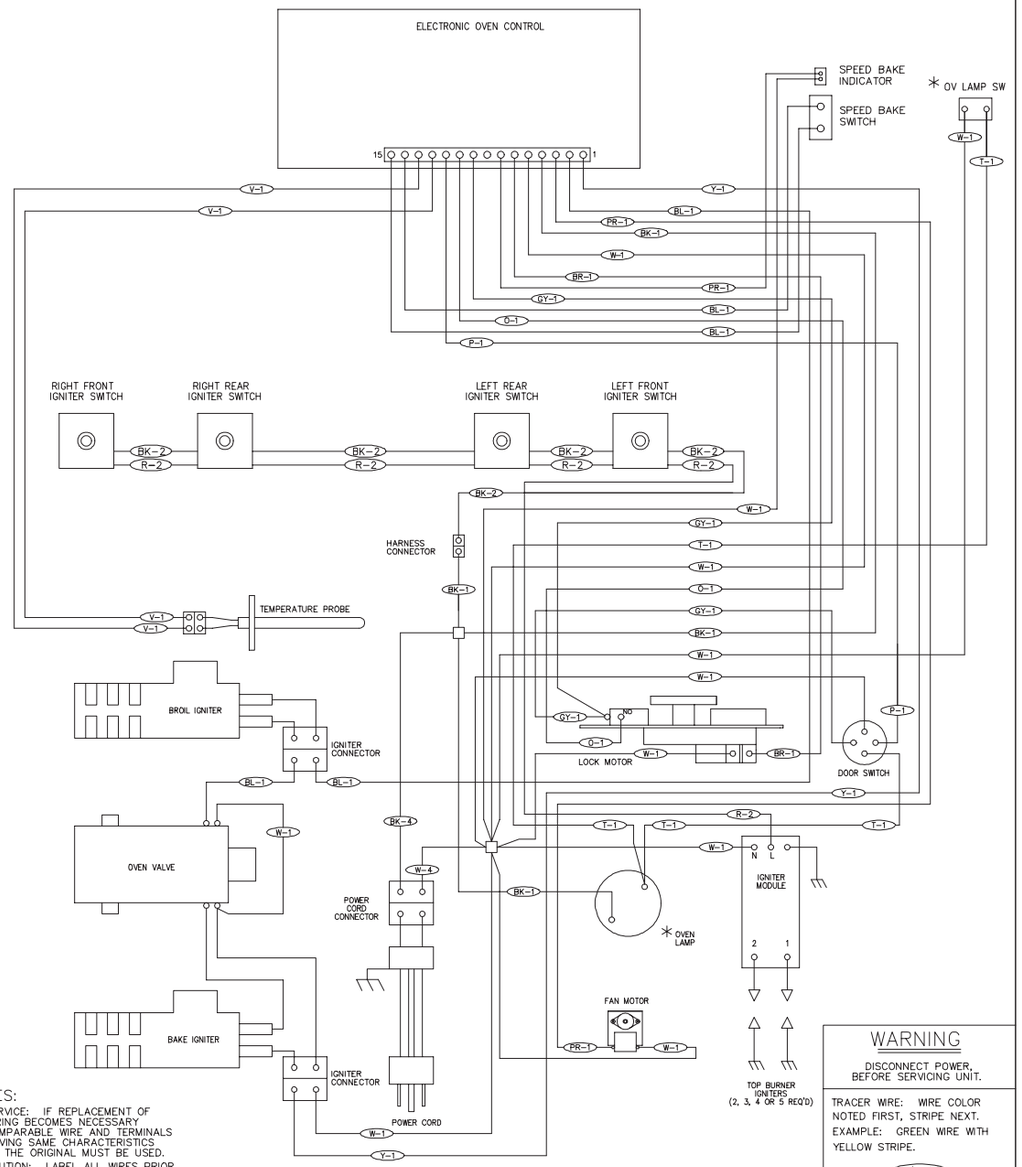

NOTES:

1. SERVICE: IF REPLACEMENT OF WIRING BECOMES NECESSARY COMPARABLE WIRE AND TERMINALS HAVING SAME CHARACTERISTICS AS THE ORIGINAL MUST BE USED.
2. CAUTION: LABEL ALL WIRES PRIOR TO DISCONNECTION WHEN SERVICING CONTROLS. WIRING ERRORS CAN CAUSE IMPROPER AND DANGEROUS OPERATION. VERIFY PROPER OPERATION AFTER SERVICING.
3. * THESE ITEMS MAY NOT APPEAR ON ALL MODELS.

4	16	125	3173
3	18	125	3173
2	20	150	3321
1	20	125	3173
WIRE	AWG	TEMP °C	UL STYLE

316255218

WARNING

DISCONNECT POWER, BEFORE SERVICING UNIT.

TRACER WIRE: WIRE COLOR NOTED FIRST, STRIPE NEXT. EXAMPLE: GREEN WIRE WITH YELLOW STRIPE.

G/Y-8

COLOR CODE			
BK	BLACK	P	PINK
BL	BLUE	PR	PURPLE
BR	BROWN	R	RED
C	COPPER	T	TAN
G	GREEN	V	VIOLET
GY	GRAY	W	WHITE
O	ORANGE	Y	YELLOW

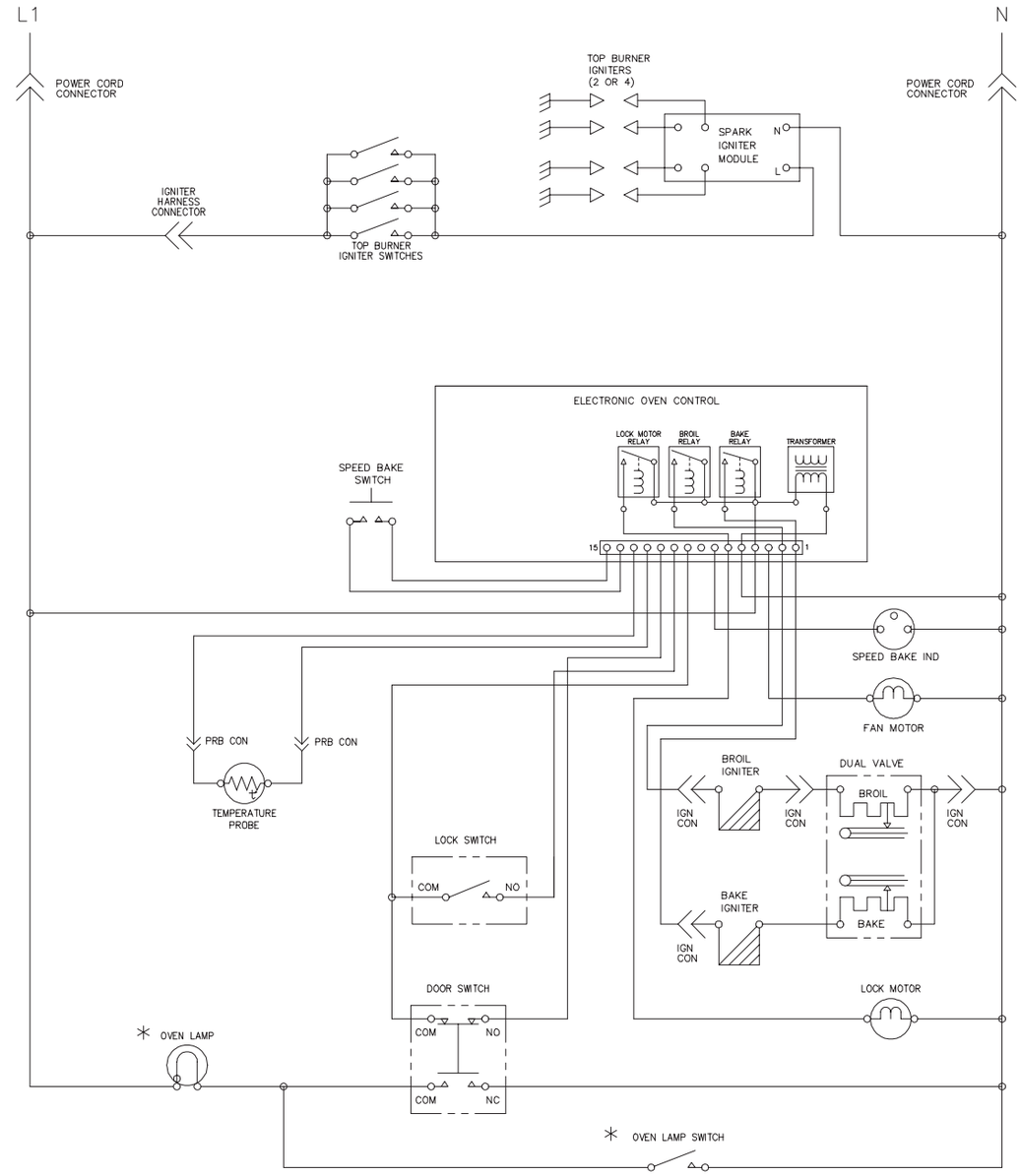

NOTES:

1. CIRCUIT SHOWN WITH ALL CONTROLS SET TO OFF, OVEN DOOR CLOSED AND UNLOCKED.
2. COMPONENTS WITH * DO NOT APPEAR ON ALL MODELS.

316255218