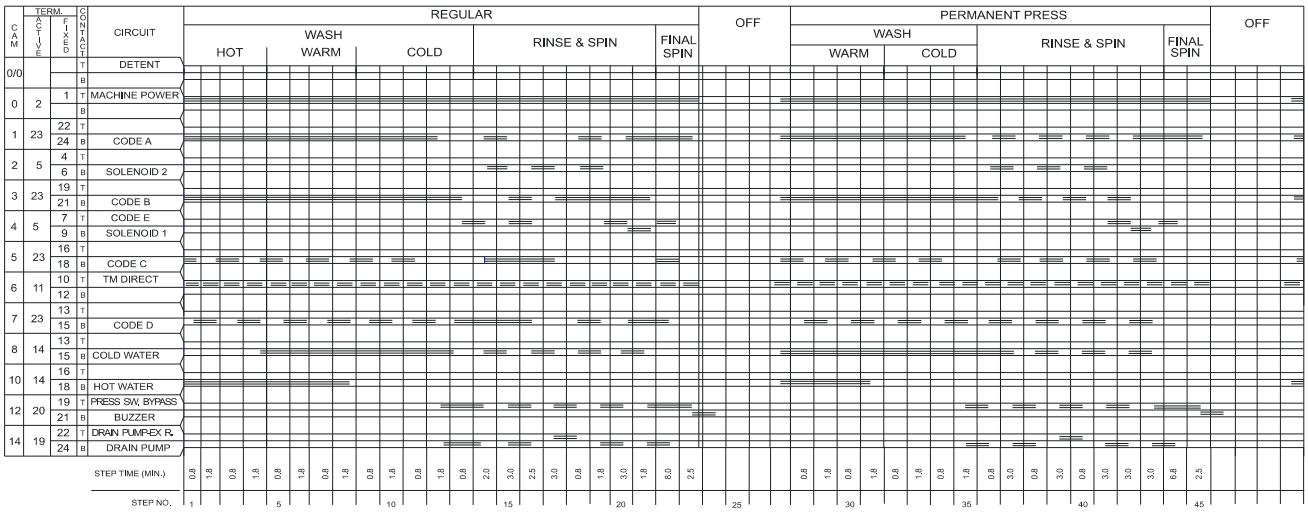

⚠ WARNING TO REDUCE THE RISK OF ELECTRICAL SHOCK DISCONNECT THIS APPLIANCE FROM THE POWER SUPPLY BEFORE ATTEMPTING ANY USER MAINTENANCE. TURNING THE CONTROLS TO THE OFF POSITION DOES NOT DISCONNECT THIS APPLIANCE FROM THE POWER SUPPLY.

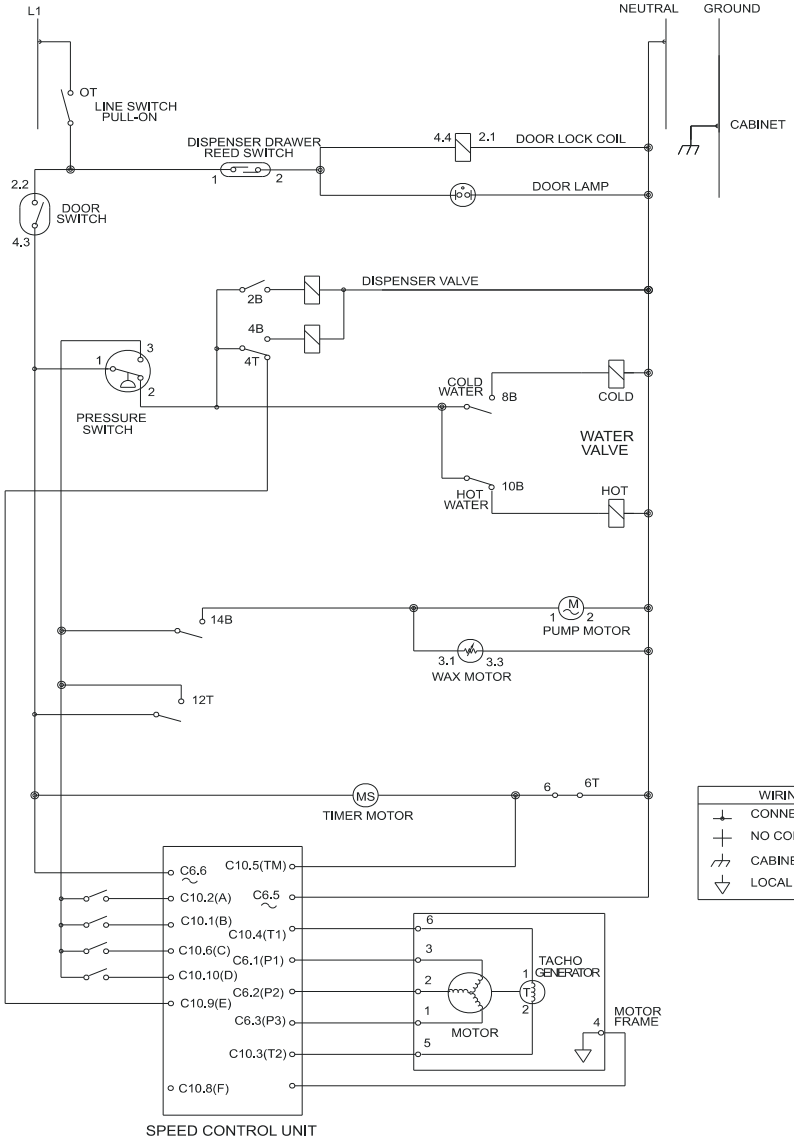

COMPONENT RESISTANCE TABLE		
ELECTRICAL COMPONENT		RESISTANCE Ω @ 77°F(25 @ 77°C)
WATER VALVE SOLENOIDS		880 ±10%
DOOR LOCK SOLENOID		380 ±10%
TIMER MOTOR		2425 ±6%
PUMP MOTOR		15 ±7%
DISPENSER VALVE SOLENOIDS		1100 ±7%
MOTOR	M1 TO M2	2.6 ±7%
	M2 TO M3	2.6 ±7%
	M1 TO M3	2.6 ±7%
	M5 TO M6	184 ±7%

MOTOR PLUG-MALE
(END VIEW)

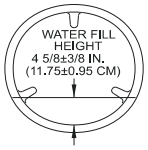

NO LOAD, START POSITION OF PERMANENT PRESS

WIRING CODES	
⊥	CONNECTION
+	NO CONNECTION
⏚	CABINET GROUND
⏚	LOCAL GROUND

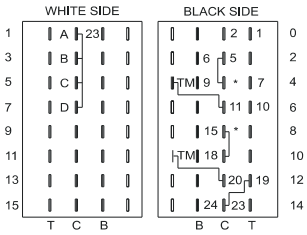

TIMER PLUG-MALE
(END VIEW)

131 907 200