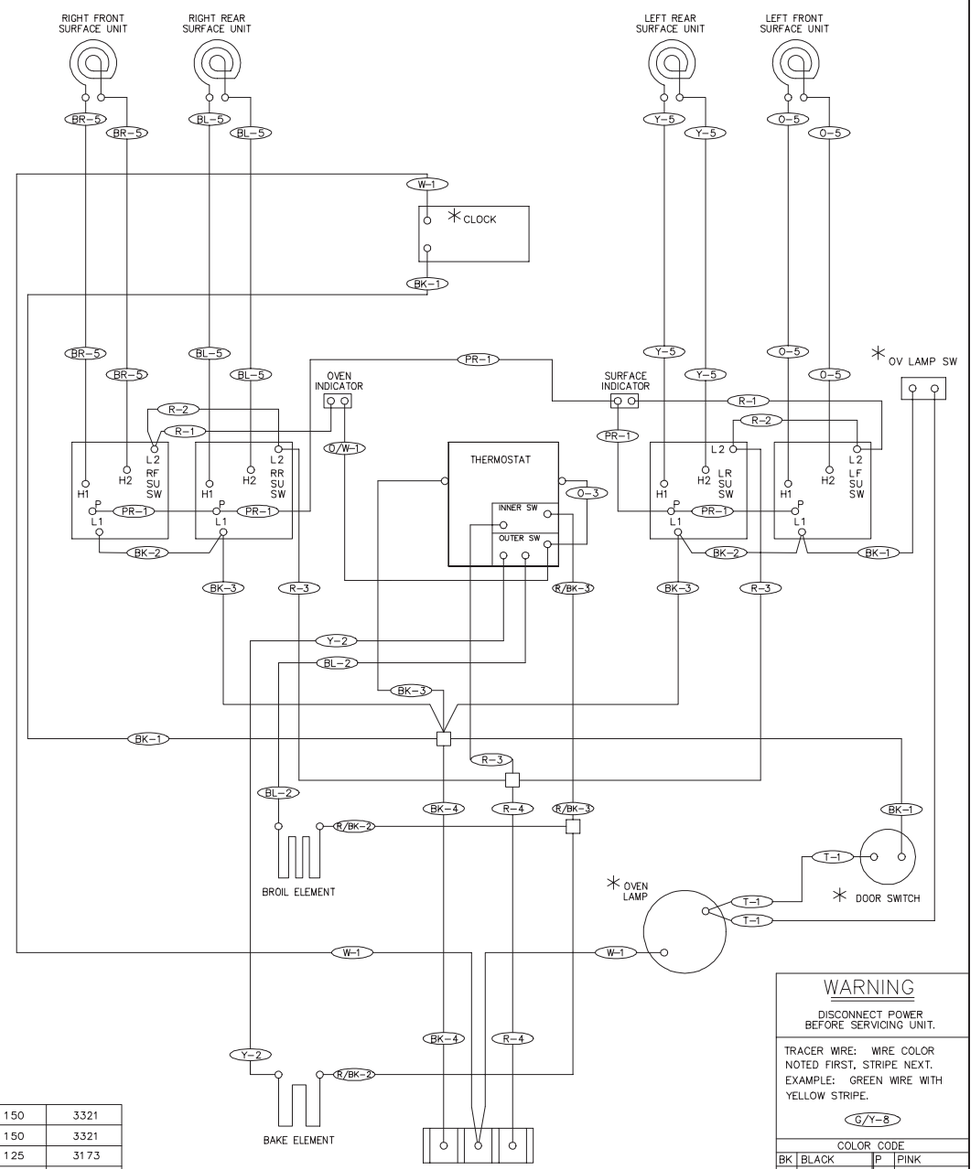

WIRE	AWG	TEMP°C	UL STYLE
6	14	150	3321
5	16	150	3321
4	12	125	3173
3	14	125	3173
2	16	125	3173
1	20	125	3173

316255305

WARNING

DISCONNECT POWER BEFORE SERVICING UNIT.

TRACER WIRE: WIRE COLOR NOTED FIRST, STRIPE NEXT. EXAMPLE: GREEN WIRE WITH YELLOW STRIPE.

G/Y-8

COLOR CODE			
BK	BLACK	P	PINK
BL	BLUE	PR	PURPLE
BR	BROWN	R	RED
C	COPPER	T	TAN
G	GREEN	V	VIOLET
GY	GRAY	W	WHITE
O	ORANGE	Y	YELLOW

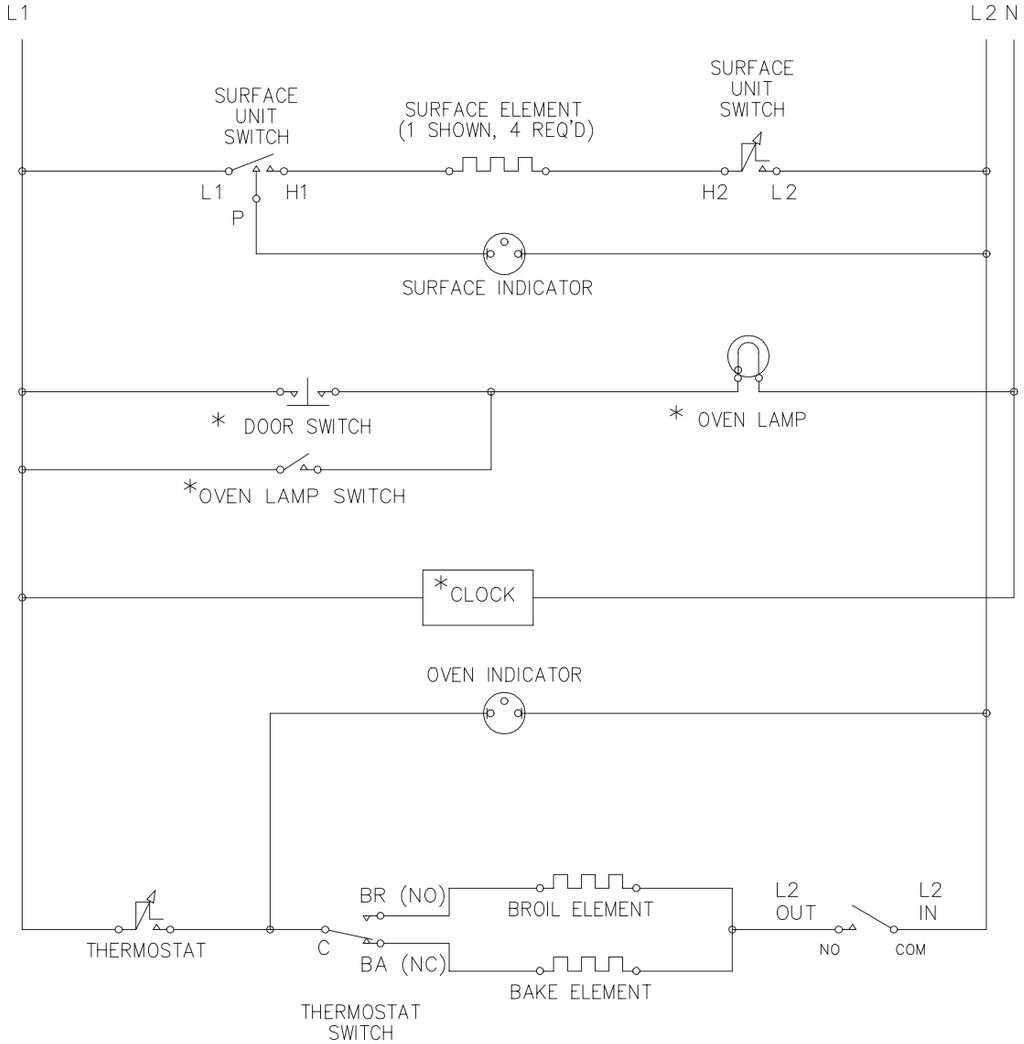

THERMOSTAT SELECTOR SWITCH		
CONTACTS	BAKE	BROIL
C–BA	X	
C–BR		X
X INDICATES CONTACTS CLOSED		

316255305

*THESE COMPONENTS MAY NOT APPEAR ON ALL MODELS.