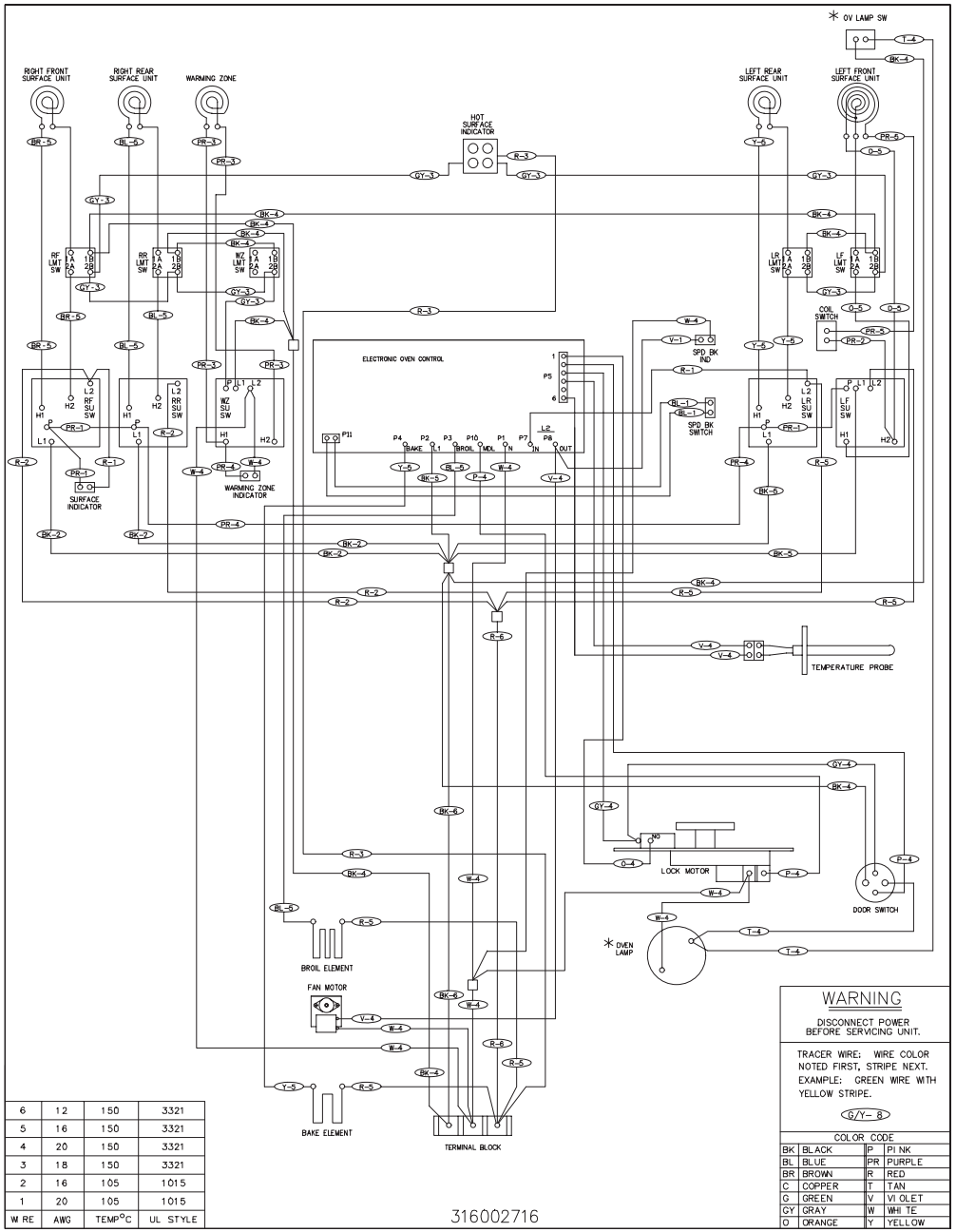

6	12	150	3321
5	16	150	3321
4	20	150	3321
3	18	150	3321
2	16	105	1015
1	20	105	1015
WIRE	AWG	TEMP°C	UL STYLE

316002716

WARNING

DISCONNECT POWER BEFORE SERVICING UNIT.

TRACER WIRE: WIRE COLOR NOTED FIRST, STRIPE NEXT. EXAMPLE: GREEN WIRE WITH YELLOW STRIPE.

G/Y- 8

COLOR CODE			
BK	BLACK	P	PINK
BL	BLUE	PR	PURPLE
BR	BROWN	R	RED
C	COPPER	T	TAN
G	GREEN	V	VIOLET
GY	GRAY	W	WHITE
O	ORANGE	Y	YELLOW

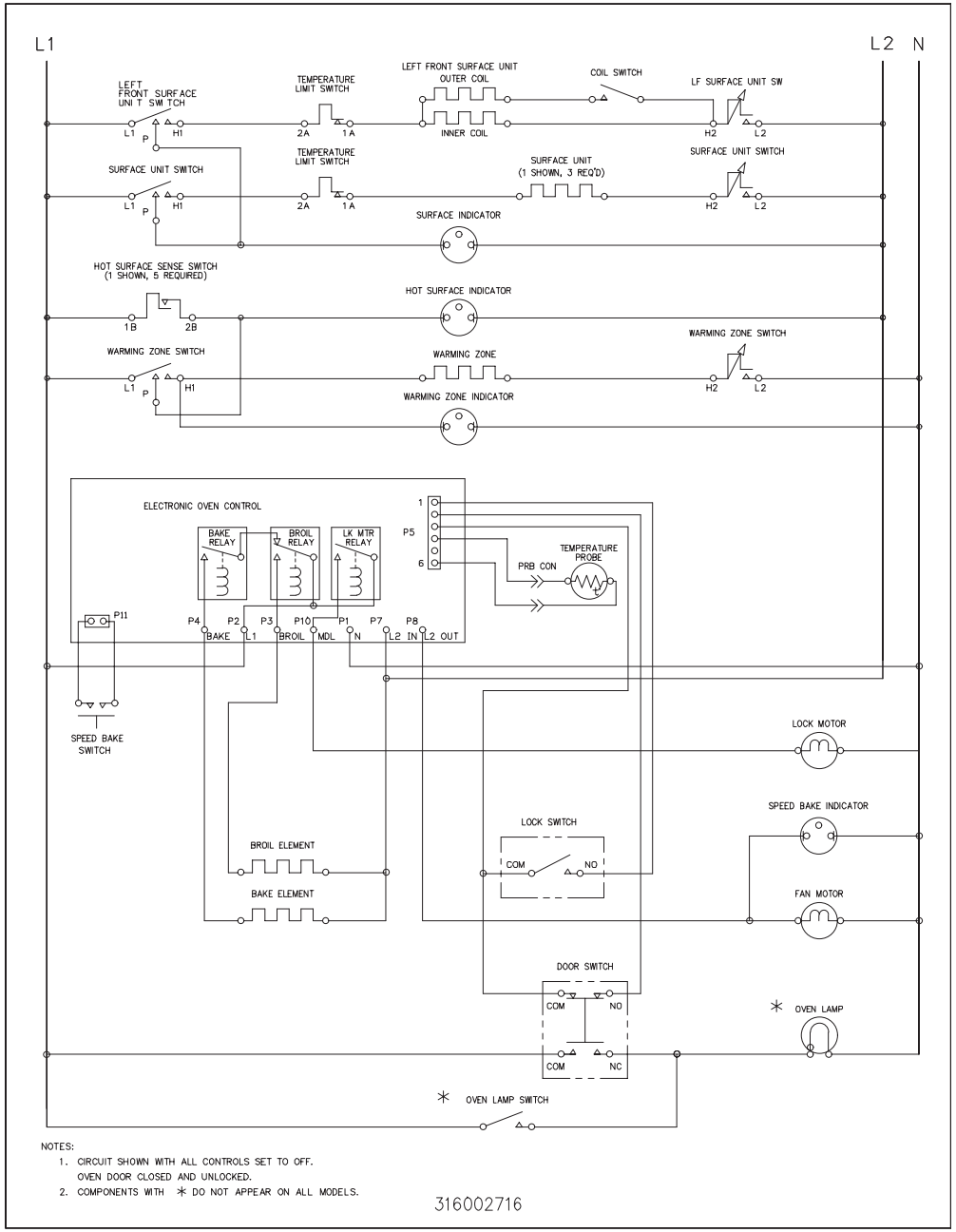

NOTES:

1. CIRCUIT SHOWN WITH ALL CONTROLS SET TO OFF. OVEN DOOR CLOSED AND UNLOCKED.
2. COMPONENTS WITH ✳ DO NOT APPEAR ON ALL MODELS.

316002716