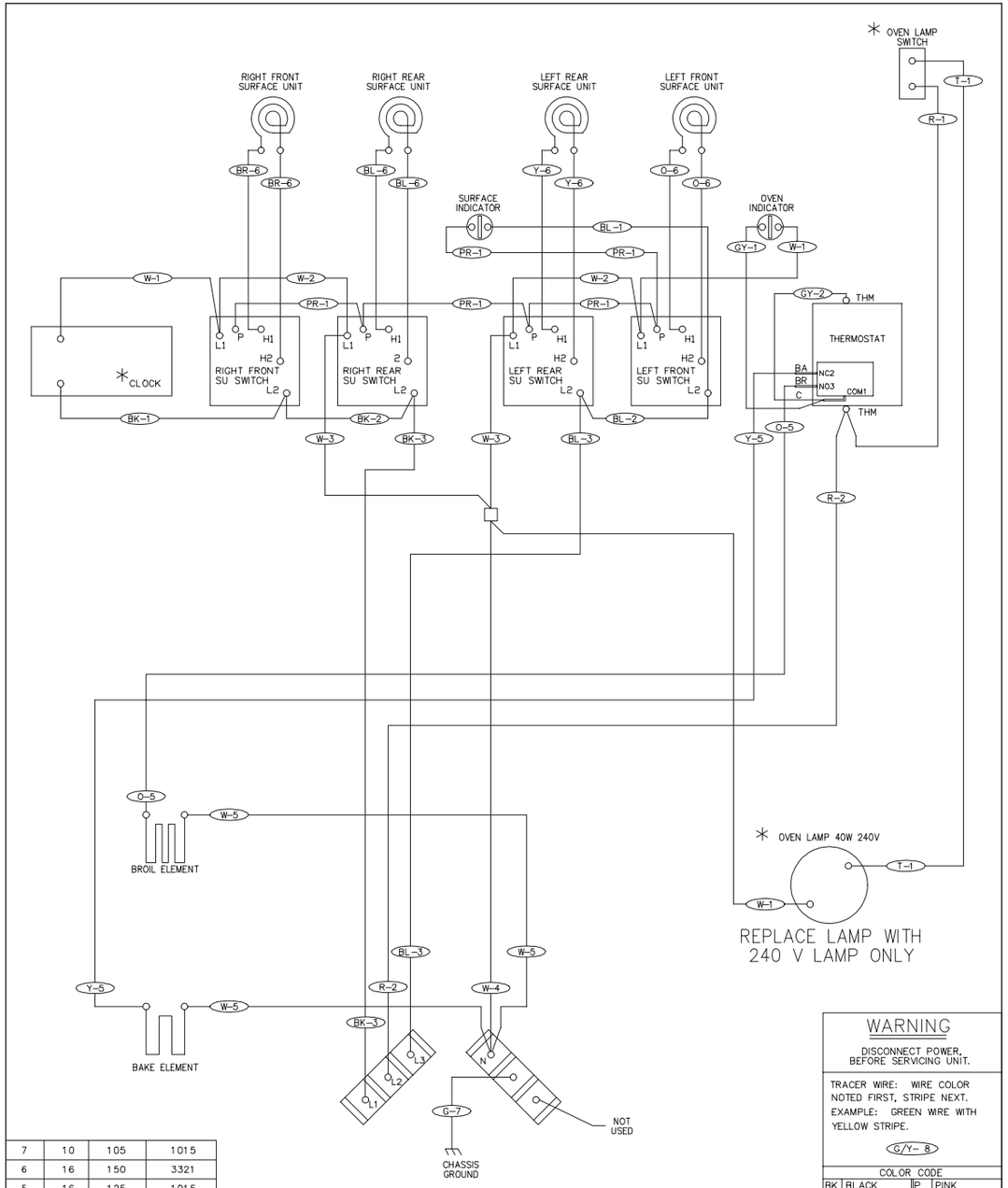

7	10	105	1015
6	16	150	3321
5	16	125	1015
4	12	105	1015
3	14	105	1015
2	16	105	1015
1	20	105	1015
WIRE	AWG	TEMP°C	UL STYLE

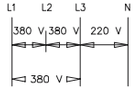

* THESE COMPONENTS MAY NOT APPEAR ON ALL MODELS.

316255128

WARNING

DISCONNECT POWER, BEFORE SERVICING UNIT.

TRACER WIRE: WIRE COLOR NOTED FIRST, STRIPE NEXT. EXAMPLE: GREEN WIRE WITH YELLOW STRIPE.

G/Y- 8

COLOR CODE			
BK	BLACK	P	PINK
BL	BLUE	PR	PURPLE
BR	BROWN	R	RED
C	COPPER	T	TAN
G	GREEN	V	VIOLET
GY	GRAY	W	WHITE
O	ORANGE	Y	YELLOW

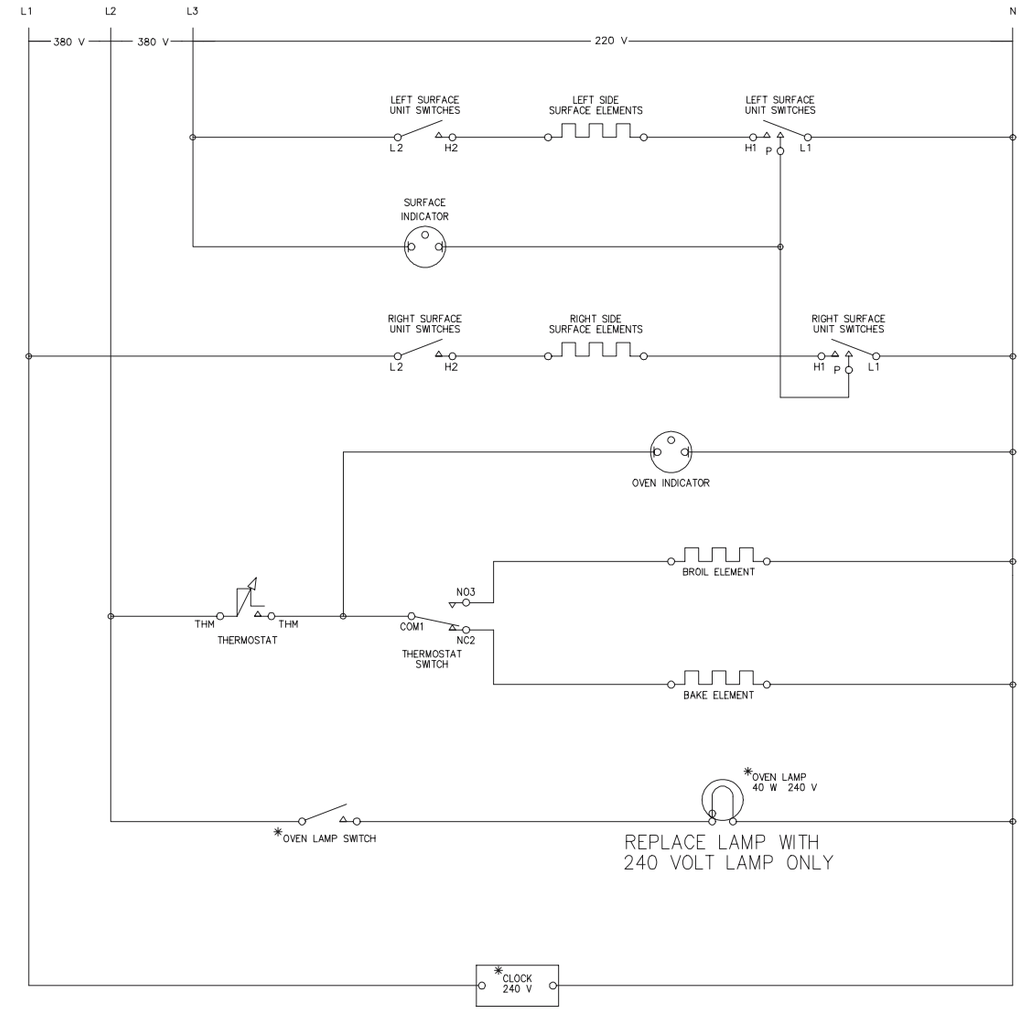

* THESE COMPONENTS MAY NOT APPEAR ON ALL MODELS.

THERMOSTAT SWITCH CONTACTS	OFF	BAKE	BROIL
1–2	0	CYCLES	CYCLES
C–BA	X	X	0
C–BR	0	0	X
X = CONTACTS CLOSED			

316255128