CAUTION: Use the Kenmore part number on all orders, not the illustration number.

CAUTION: DISCONNECT ELECTRIC CURRENT BEFORE SERVICING

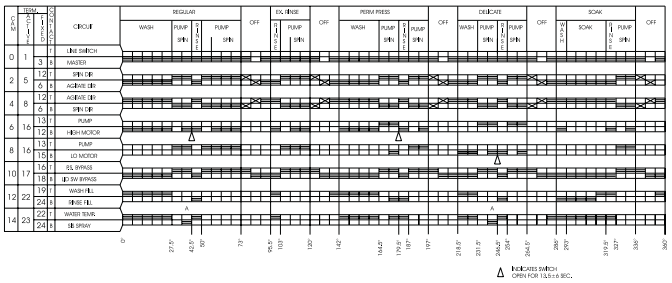

SUBINTERVAL SPRAY DETAIL

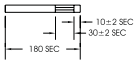

SPRAY TO OCCUR DURING THE INDICATED INTERVAL

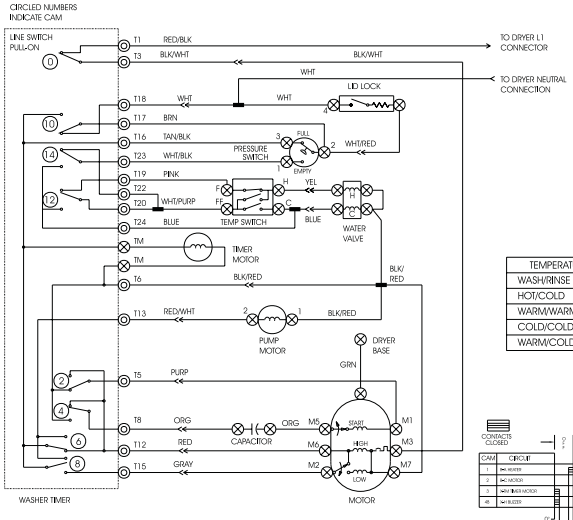

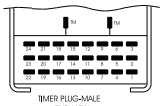

TIMER PLUG-MALE (END VIEW)

WIRING CODES

- PLUG IN TIMER TERMINAL
- QUICK DISCONNECT TERMINAL
- SCREW TERMINAL
- CONNECTION
- NO CONNECTION
- MOTOR SWITCH
- SPLICE
- MOTOR PROTECTOR
- CHASSIS (CABINET) GROUND
- HARNESS CONNECTOR TERMINAL
- INSULATED TERMINAL

TEMPERATURE SWITCH CIRCUIT			
WASH/RINSE	F-H	FF-H	FF-C
HOT/COLD	X	O	O
WARM/WARM (OPT)	O	X	X
COLD/COLD	O	O	X
WARM/COLD	X	O	X

O=OPEN
X=CLOSED

NOTES:
1. ALL WIRING MUST CONFORM TO LOCAL ELECTRICAL CODES.
2. CONNECT DRYER TO 30 AMP INDIVIDUAL BRANCH CIRCUIT.
3. DRYER TIMER SHOWN IN OFF POSITION DOOR SWITCH CLOSED, MOTOR AT REST, THERMOSTAT CLOSED, AND FABRIC SELECTOR SWITCH AT HIGH HEAT.

WASHER TIMER SHOWN IN ON POSITION TEMPERATURE SELECTOR SWITCH AT HOT WASH/COLD RINSE, AND PRESSURE SWITCH FULL.

TIME CHART

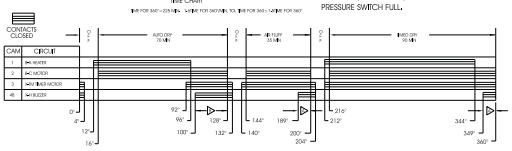

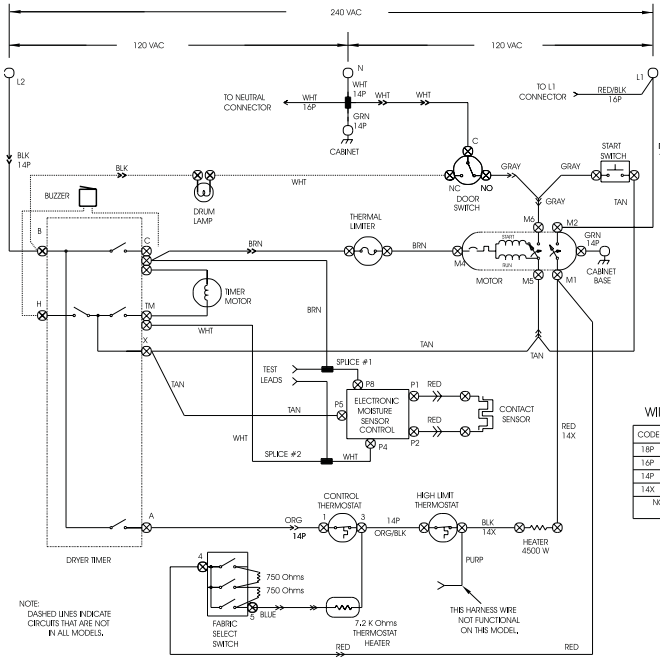

NOTE:
DASHED LINES INDICATE CIRCUITS THAT ARE NOT IN ALL MODELS.

THE BAR CHART ABOVE REPRESENTS ONE COMPLETE REVOLUTION OF TIMER SHAFT.

SHADED PORTION OF BAR CHART INDICATES THE PROPORTIONAL TIMES THAT INTERNAL TIMER CONTACTS ARE CLOSED.

A PULSER CAM, LOCATED NEXT TO THE BUZZER CAM AND ROTATING AT 12 REVOLUTIONS PER HOUR, ALLOWS CIRCUIT "X-H" TO CLOSE FOR 5 SECONDS (± 3 SECONDS)

A — 1 OR 2 TIMES IN THIS AREA

B — 3 TO 4 TIMES IN THIS AREA

FABRIC SELECTOR SWITCH

POSITION	FUNCTION	RESISTANCE (4-5)
1	HIGH	OPEN CIRCUIT
2	MEDIUM	1.5K Ohms ± 5%
3	MEDIUM/LOW	750 Ohms ± 5%
4	LOW	10 Ohms MAX

WIRE SPECIFICATIONS

CODE	WIRE GAUGE	INSULATION MATERIAL A.W.G.
18P	18	105°C PVC (POLYVINYLCHLORIDE)
16P	16	
14P	14	
14X	14	125°C X-LINK
NOTE: ALL UNSPECIFIED WIRE CODES ARE 18R		

E

WIRING DIAGRAM
P/N 131819200