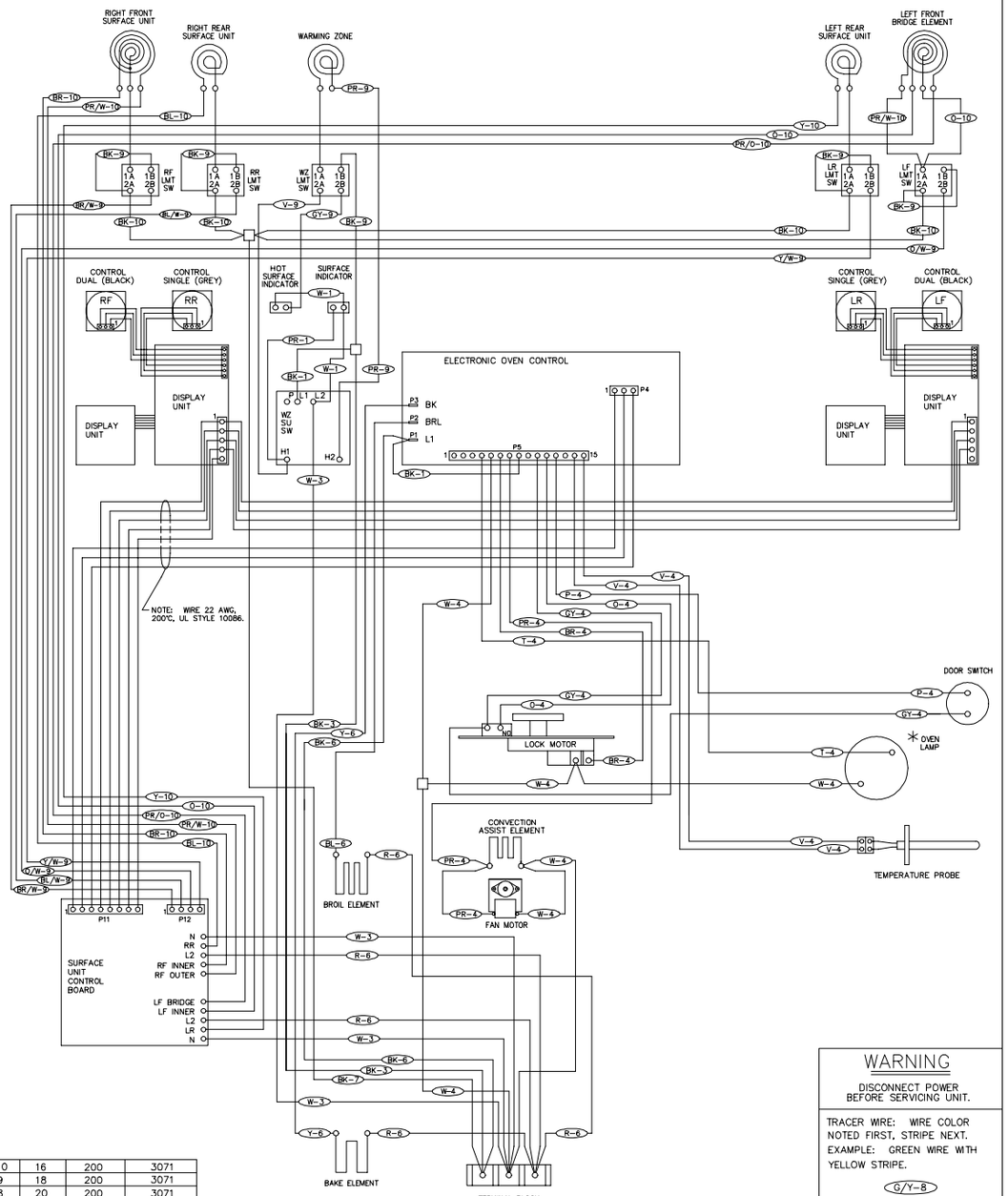


| WIRE | AWG | TEMP°C | UL STYLE |
|---|---|---|---|
| 10 | 16 | 200 | 3071 |
| 9 | 18 | 200 | 3071 |
| 8 | 20 | 200 | 3071 |
| 7 | 12 | 150 | 3321 |
| 6 | 14 | 150 | 3321 |
| 5 | 16 | 150 | 3321 |
| 4 | 20 | 150 | 3321 |
| 3 | 18 | 150 | 3321 |
| 2 | 16 | 105 | 1015 |
| 1 | 20 | 105 | 1015 |

316255113 rev. A

## WARNING

DISCONNECT POWER BEFORE SERVICING UNIT.

TRACER WIRE: WIRE COLOR NOTED FIRST, STRIPE NEXT. EXAMPLE: GREEN WIRE WITH YELLOW STRIPE.

G/Y-8

| COLOR CODE | | | |
|---|---|---|---|
| BK | BLACK | P | PINK |
| BL | BLUE | PR | PURPLE |
| BR | BROWN | R | RED |
| C | COPPER | T | TAN |
| G | GREEN | V | VIOLET |
| GY | GRAY | W | WHITE |
| O | ORANGE | Y | YELLOW |

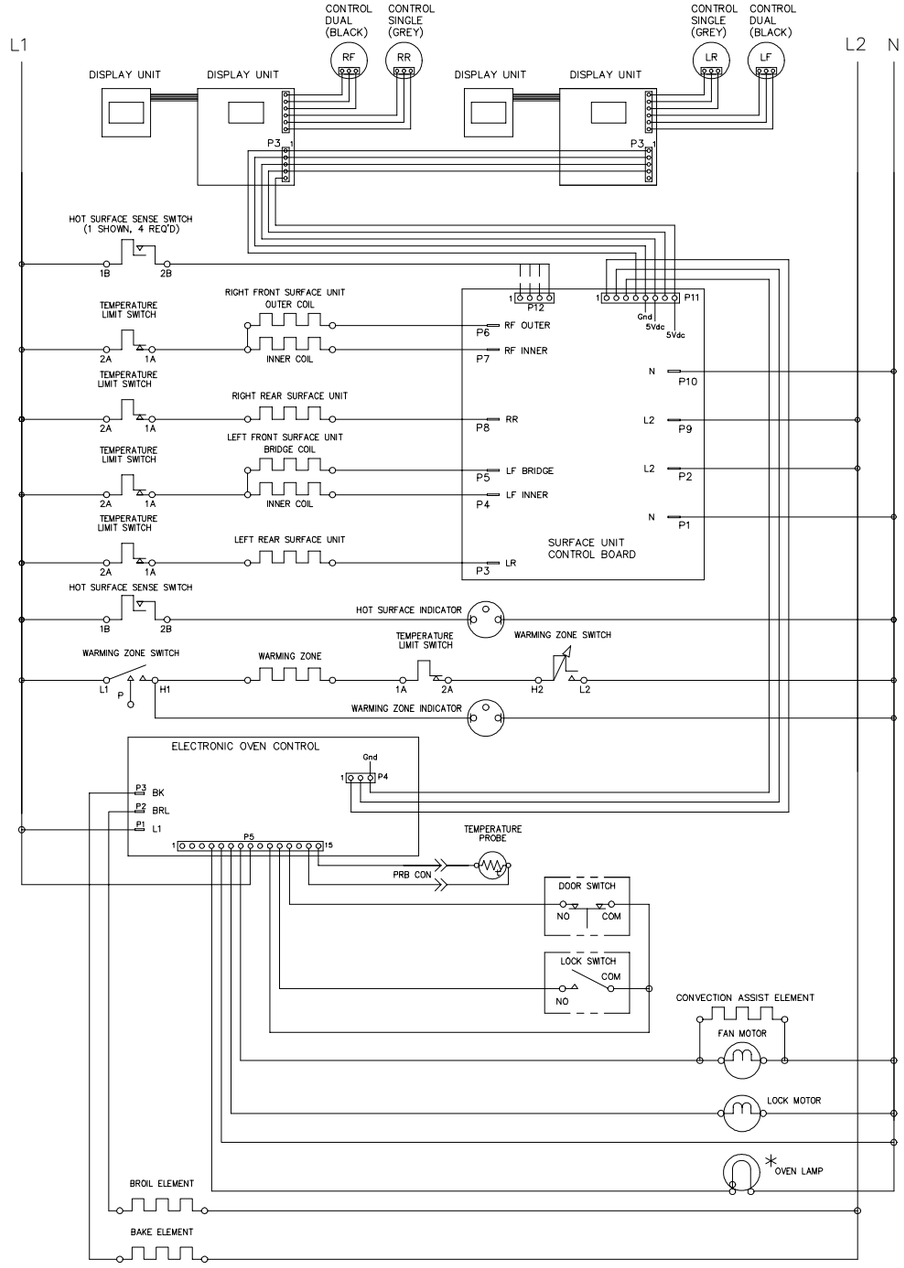


NOTES:

1. CIRCUIT SHOWN WITH ALL CONTROLS SET TO OFF. OVEN DOOR CLOSED AND UNLOCKED.
2. COMPONENTS WITH * DO NOT APPEAR ON ALL MODELS.

316255113 rev. A