CAUTION: DISCONNECT ELECTRIC CURRENT BEFORE SERVICING. LABEL ALL WIRES PRIOR TO DISCONNECTION WHEN SERVICING CONTROLS. WIRING ERRORS CAN CAUSE IMPROPER AND DANGEROUS OPERATION. VERIFY PROPER OPERATION AFTER SERVICING.

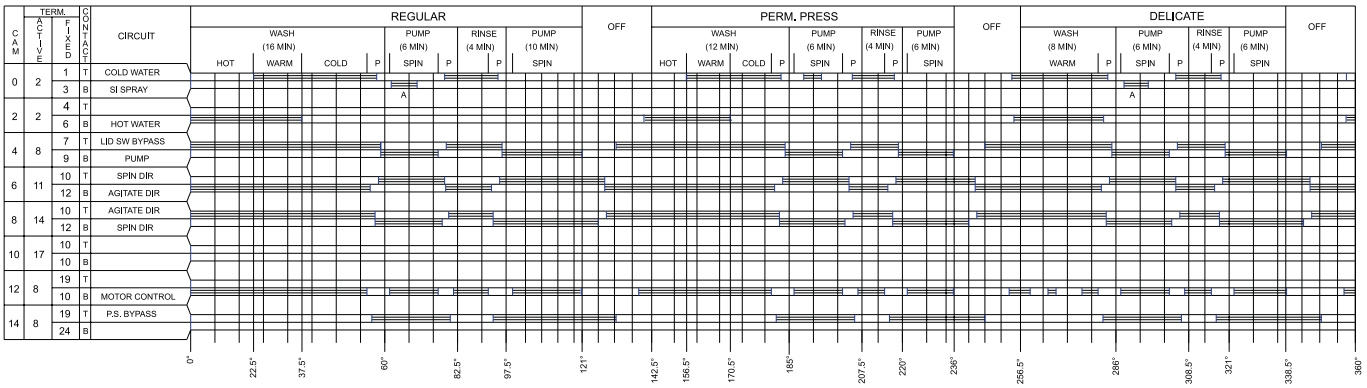

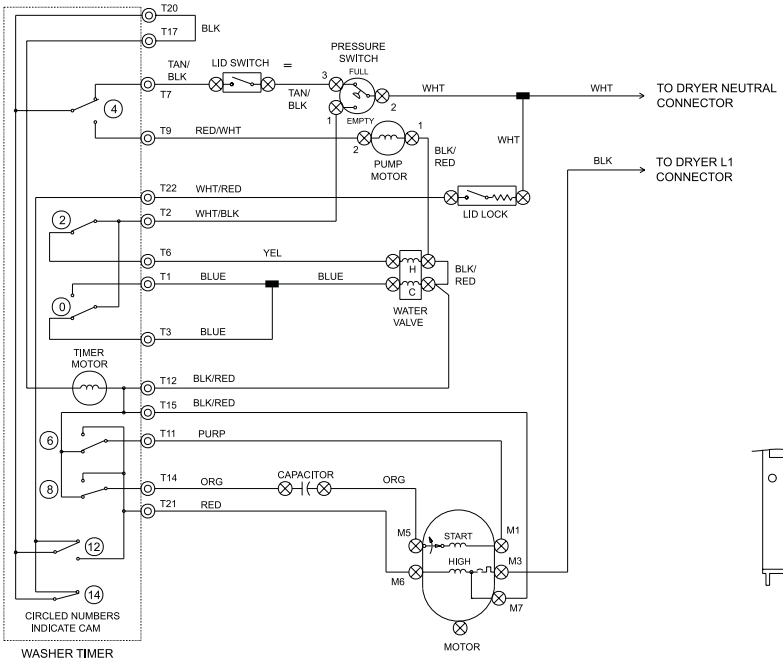

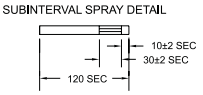

WIRING CODES

- PLUG-IN TIMER
- QUICK DISCONNECT TERMINAL
- CONNECTION
- NO CONNECTION
- MOTOR SWITCH
- SPLICE
- MOTOR PROTECTOR
- CHASSIS (CABINET) GROUND
- SCREW TERMINAL
- HARNESS CONNECTOR TERMINAL
- INSULATED TERMINAL

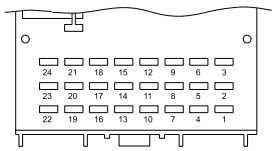

NOTES;

1. ALL WIRING MUST CONFORM TO LOCAL ELECTRICAL CODES.
2. CONNECT DRYER TO 15 AMP INDIVIDUAL BRANCH CIRCUIT.
3. DRYER TIMER SHOWN IN OFF POSITION DOOR SWITCH CLOSED, MOTOR AT REST, AN THERMOSTAT CLOSED.

   WASHER TIMER SHOWN IN ON POSITION AND PRESSURE SWITCH FULL.

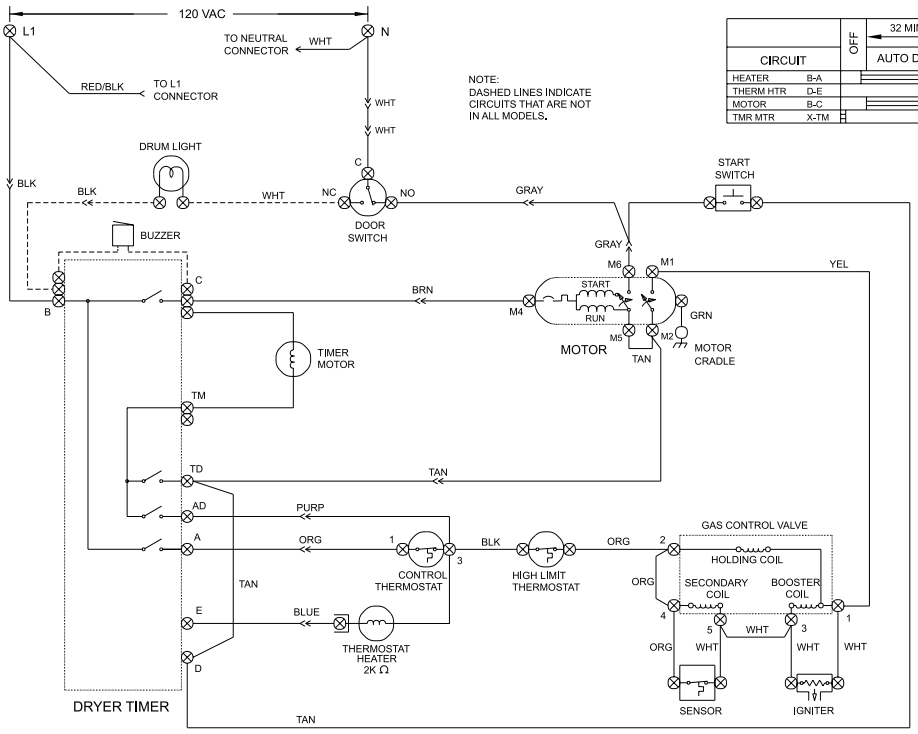

NOTE:
DASHED LINES INDICATE CIRCUITS THAT ARE NOT IN ALL MODELS.

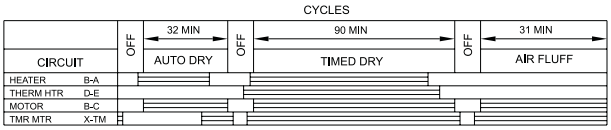

THE BAR CHART ABOVE REPRESENTS ONE COMPLETE REVOLUTION OF TIMER SHAFT.

SHADED PORTION OF BAR CHART INDICATES THE PROPORTIONAL TIMES THAT INTERNAL TIMER CONTACTS ARE CLOSED.

G

WIRING DIAGRAM
P/N 134130100