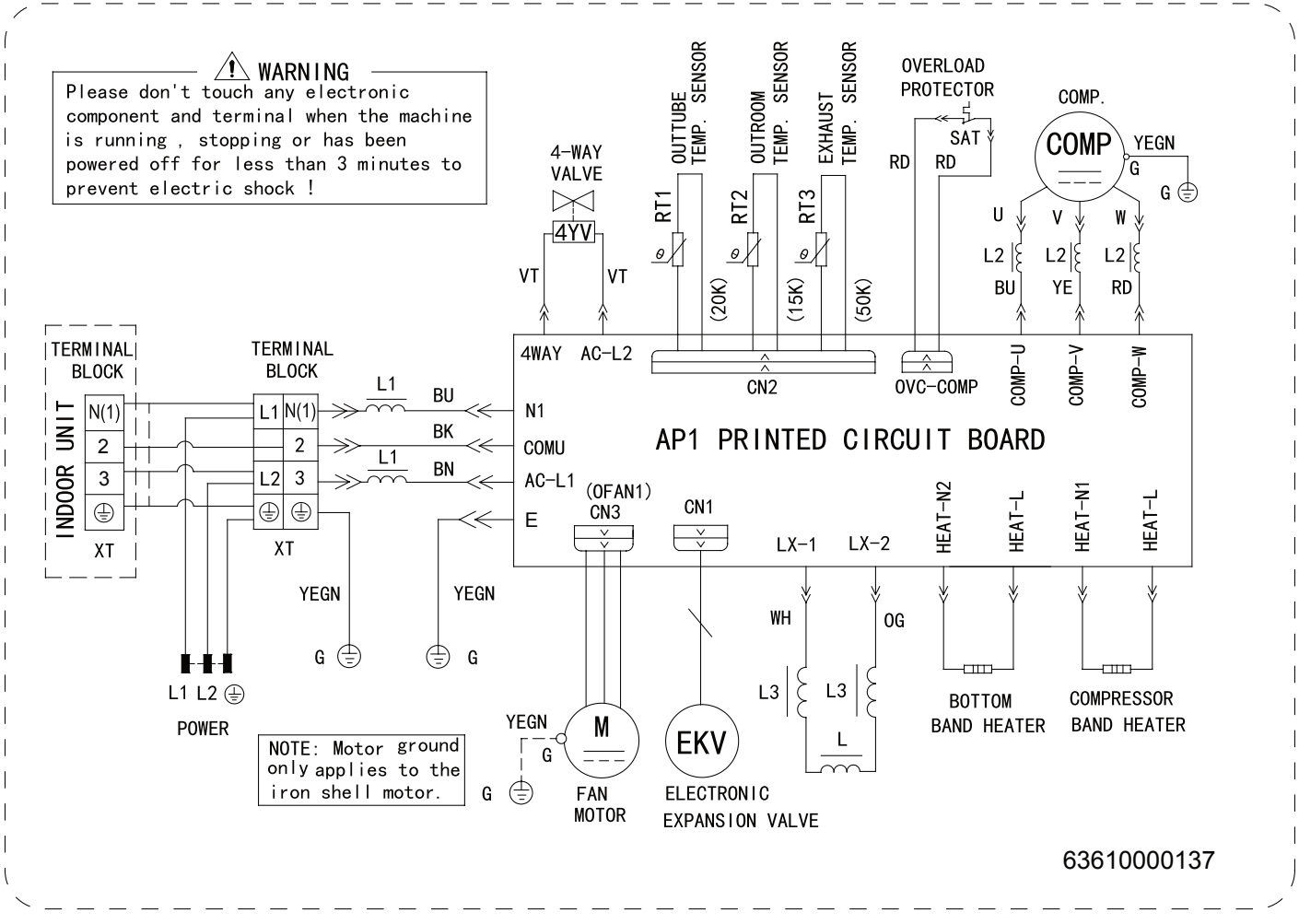
WARNING
Please don't touch any electronic component and terminal when the machine is running , stopping or has been powered off for less than 3 minutes to prevent electric shock !
4-WAY VALVE
4YV
VT
VT
OUTTUBE TEMP. SENSOR
OUTROOM TEMP. SENSOR
EXHAUST TEMP. SENSOR
RT1
RT2
RT3
(20K)
(15K)
(50K)
OVERLOAD PROTECTOR
SAT
RD
RD
COMP.
COMP
YEGN
G
G
U
V
W
L2
L2
L2
BU
YE
RD
TERMINAL BLOCK
INDOOR UNIT
N(1)
2
3
XT
TERMINAL BLOCK
L1
N(1)
2
L2
3
XT
L1
L1
BU
BK
BN
4WAY
AC-L2
CN2
OVC-COMP
COMP-U
COMP-V
COMP-W
N1
COMU
AC-L1
E
AP1 PRINTED CIRCUIT BOARD
(OFAN1)
CN3
CN1
LX-1
LX-2
HEAT-N2
HEAT-L
HEAT-N1
HEAT-L
YEGN
YEGN
G
G
WH
OG
L1 L2
POWER
L3
L3
L
BOTTOM BAND HEATER
COMPRESSOR BAND HEATER
YEGN
G
M
EKV
G
FAN MOTOR
ELECTRONIC EXPANSION VALVE
NOTE: Motor ground only applies to the iron shell motor.
63610000137