MODEL: EI30SM55JS/W/K

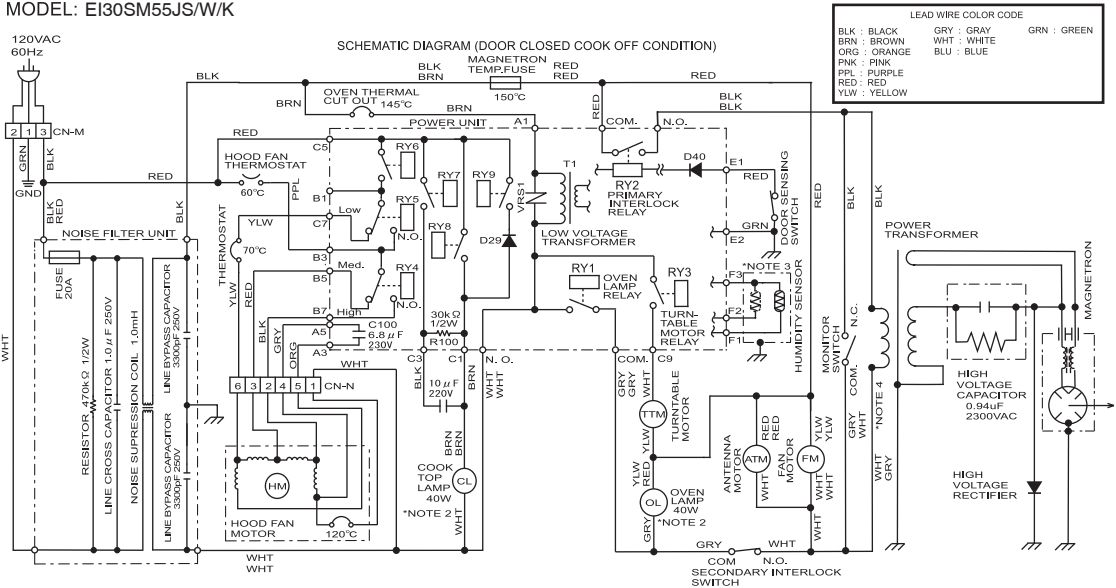

NOTES:

1. Circuits subject to change without notice
2. The neutral wire(White or Gray wire) must be connected to the prescribed tab terminal of the lamp socket.
3. Only certain models use the humidity sensor.
4. The neutral wire(White/Gray wire) must be connected to the winding start tab terminal of the power transformer primary winding.

316902418
TMAPCA806WRRZ