2202019174

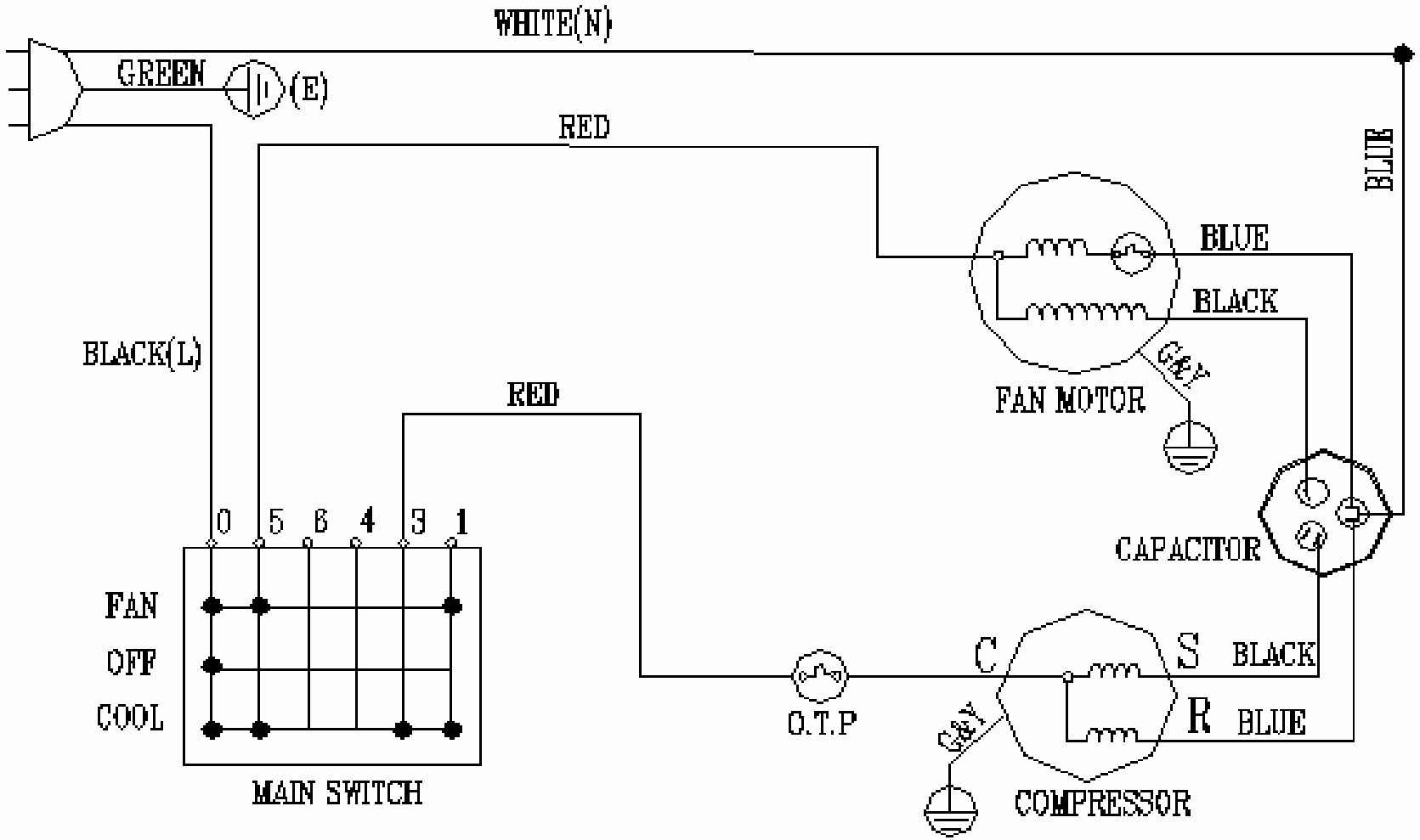

Note:The illustration is explained the wire connection of the O.T.P of the external compressor.
For the internal compressor, the O.T.P has been connected with the compressor.