Whirlpool® Laundry Pedestal

PRODUCT MODEL NUMBERS

LAB2700M
LAB2700P

OVERALL DIMENSIONS

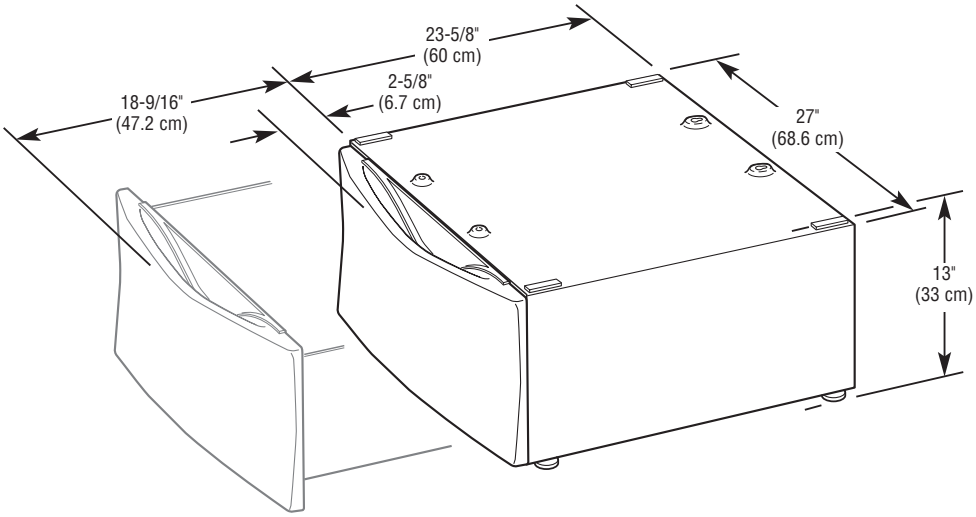

Because Whirlpool Corporation policy includes a continuous commitment to improve our products, we reserve the right to change materials and specifications without notice.

Dimensions are for planning purposes only. For complete details, see Installation Instructions packed with product. Specifications subject to change without notice.

Ref. 8537141 Rev. B
05-03-05